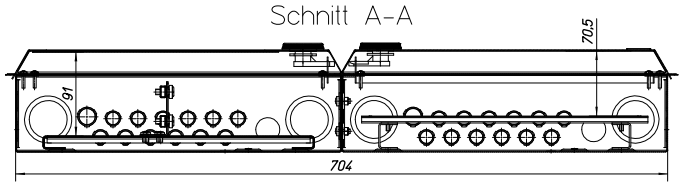

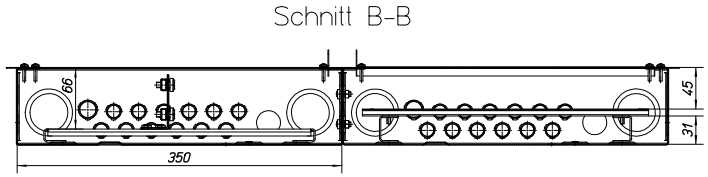

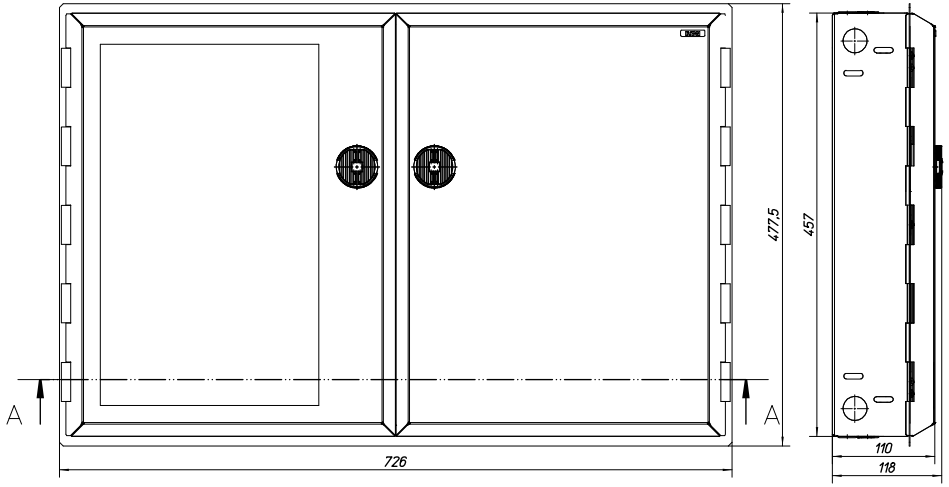

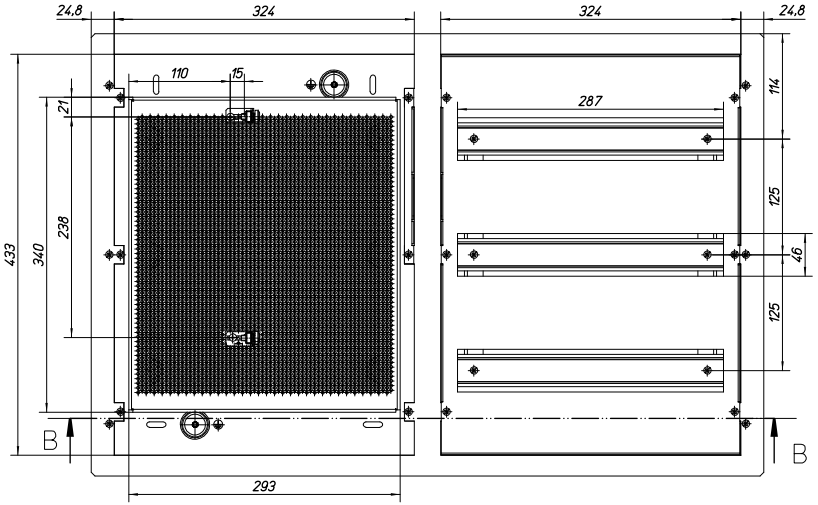

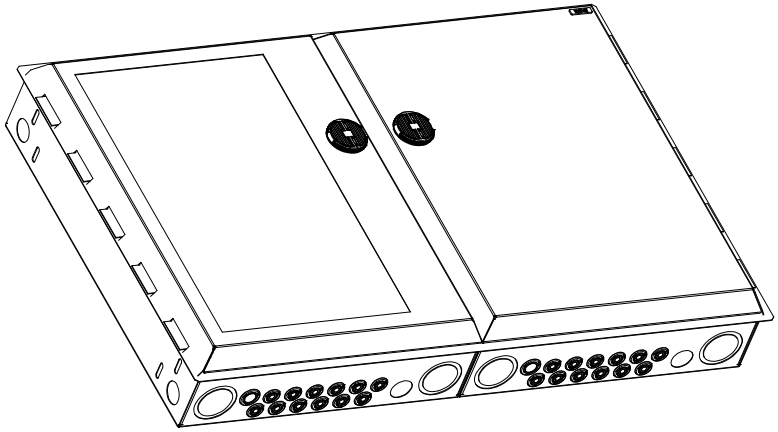

CONFIDENTIAL AND PROPRIETARY
NOTICE TO PERSONS RECEIVING THIS DOCUMENT
THIS DOCUMENT AND ALL DATA AND INFORMATION CONTAINED THEREIN, IS CONFIDENTIAL AND IS THE EXCLUSIVE PROPERTY OF EATON CORPORATION. ANY RECEIPT OR POSSESSION OF THIS DOCUMENT DOES NOT CARRY WITH IT ANY RIGHTS TO DISCLOSE THIS DOCUMENT, OR TO REPRODUCE, USE, OR MANUFACTURE ANYTHING DESCRIBED IN IT. ANY REPRODUCTION, DISCLOSURE OR OTHER USE WITHOUT THE WRITTEN CONSENT OF EATON IS PROHIBITED. IF THE RECIPIENT CHANGES, ALTERS OR REMOVES THIS NOTICE, THE RECIPIENT SHALL OBTAIN THE WRITTEN CONSENT OF EATON CORPORATION, PRIOR TO ANY USE OF THE DOCUMENT OR THE INFORMATION CONTAINED IN IT. THE RECEIPT OF THIS DOCUMENT IS SUBJECT TO THE TERMS AND CONDITIONS OF THIS NOTICE. THIS NOTICE SHALL GOVERN THE STATUS OF THIS DOCUMENT.
© 2010 Eaton – All Rights Reserved.

Pos.	Unit	Name	Drawing no.	Material, dimensions, processing
Mat.:			Eaton Industries (Austria) GmbH Eaton Electrical Sector Eugenia 1 3943 Schrems, Austria TEL. +43 2853 702-0*, Fax +43 2853 76509	EATON Powering Business Worldwide
processing:			part list:	CAD
Dim. without tol. spec. accord. to:			Designed:	VE177336
Change: from: at:			Drawn:	
			Checked:	
Scale: 1:4	I-48-3-MULTIMEDIA-DHP_DHS			Replacement for:
				Replaced by: